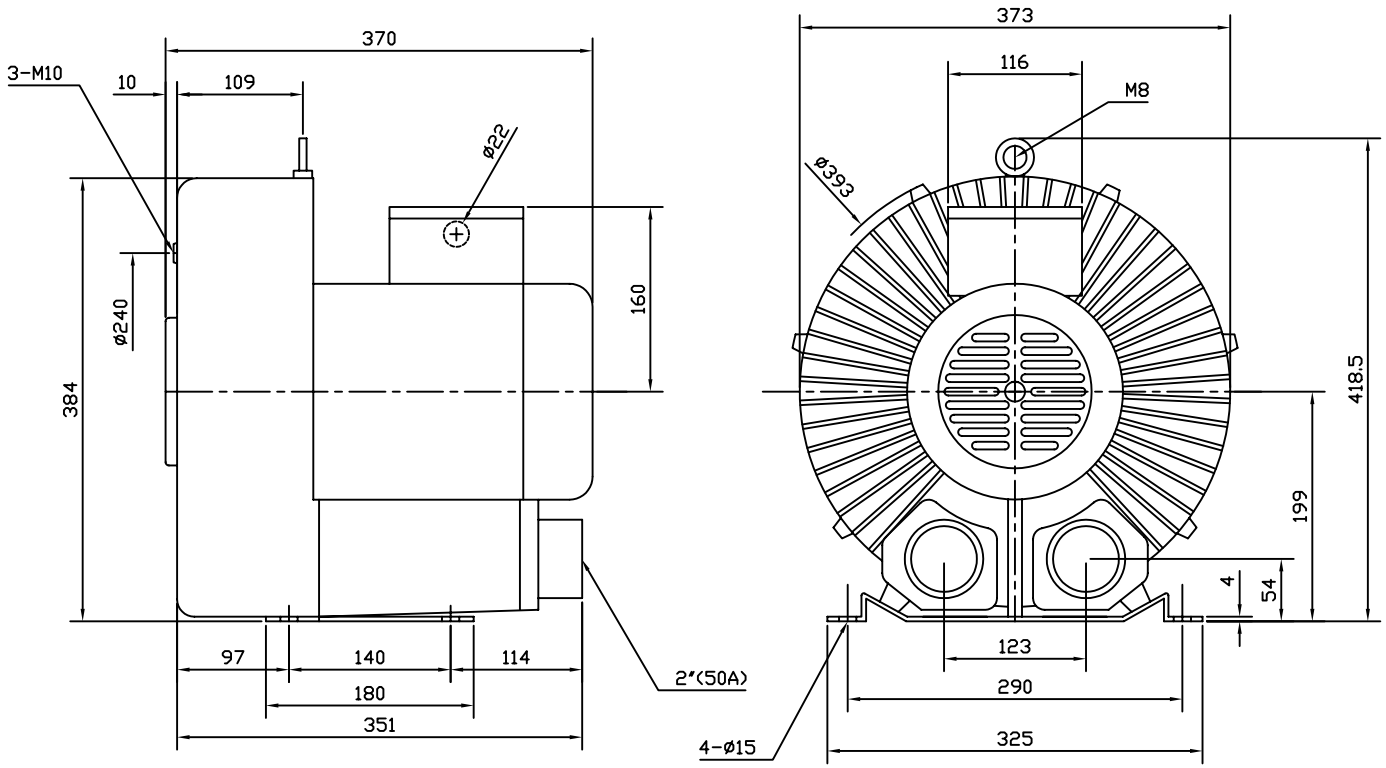

HRB-500				NAME OF PARTS	Shape Drawing
DRAWING	DESIGN	CHECKER	APPROVED	SCALE 1/1	UNIT MM
				SIZE	3ø2.55KW2P
HWANG HAE ELECTRIC MOTOR'S				DWG. NO	10221115