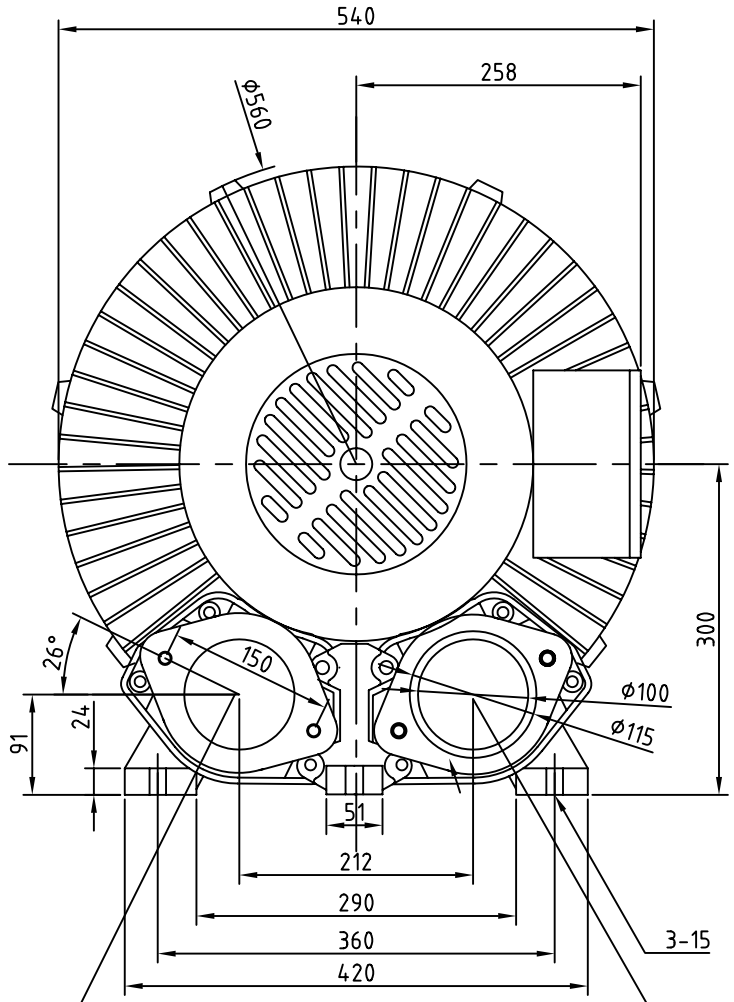

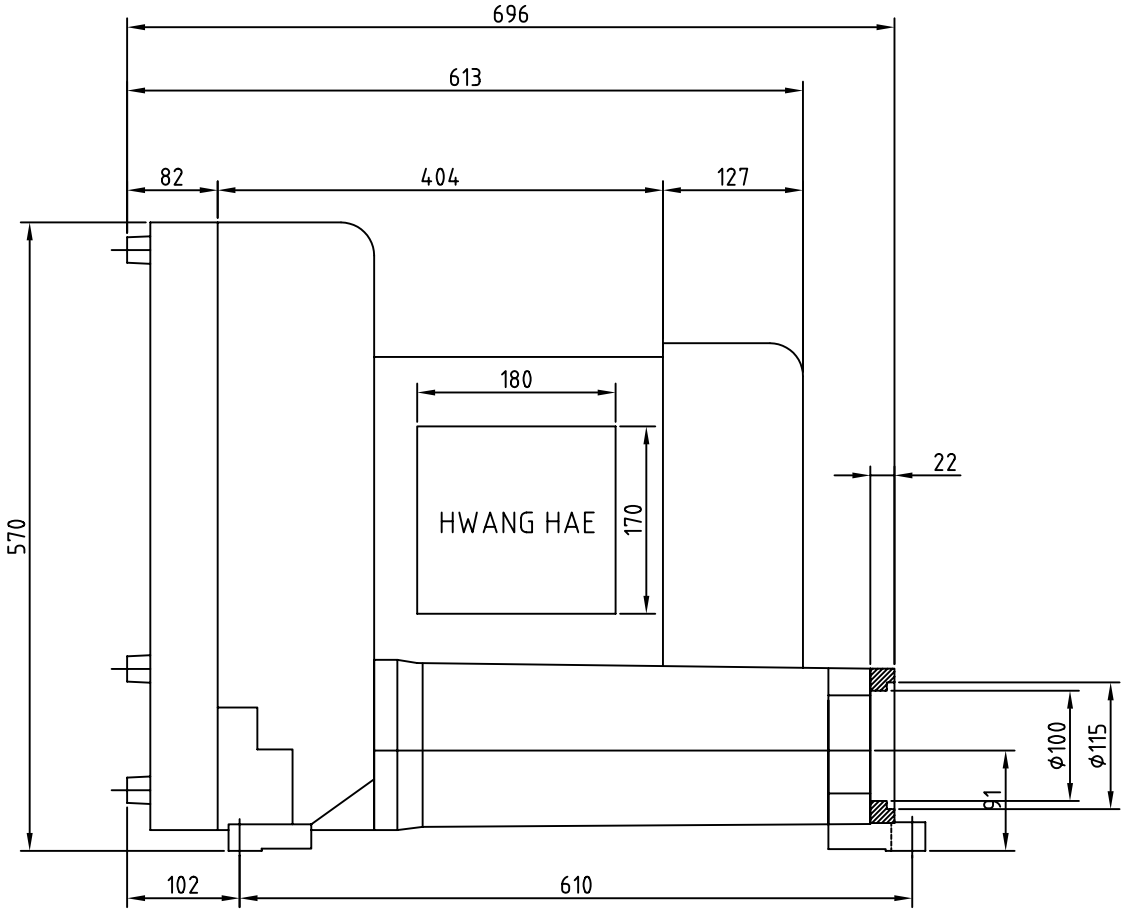

IN: 100A

OUT: 100A

HRB-1200				NAME OF PARTS	Shape drawing
DRAWING	DESIGN	CHECKER	APPROVED	SCALE	UNIT MM
				SIZE	3Φ15.3kw2p
HWANG HAE ELECTRIC MOTOR'S				DWG. NO	10221024